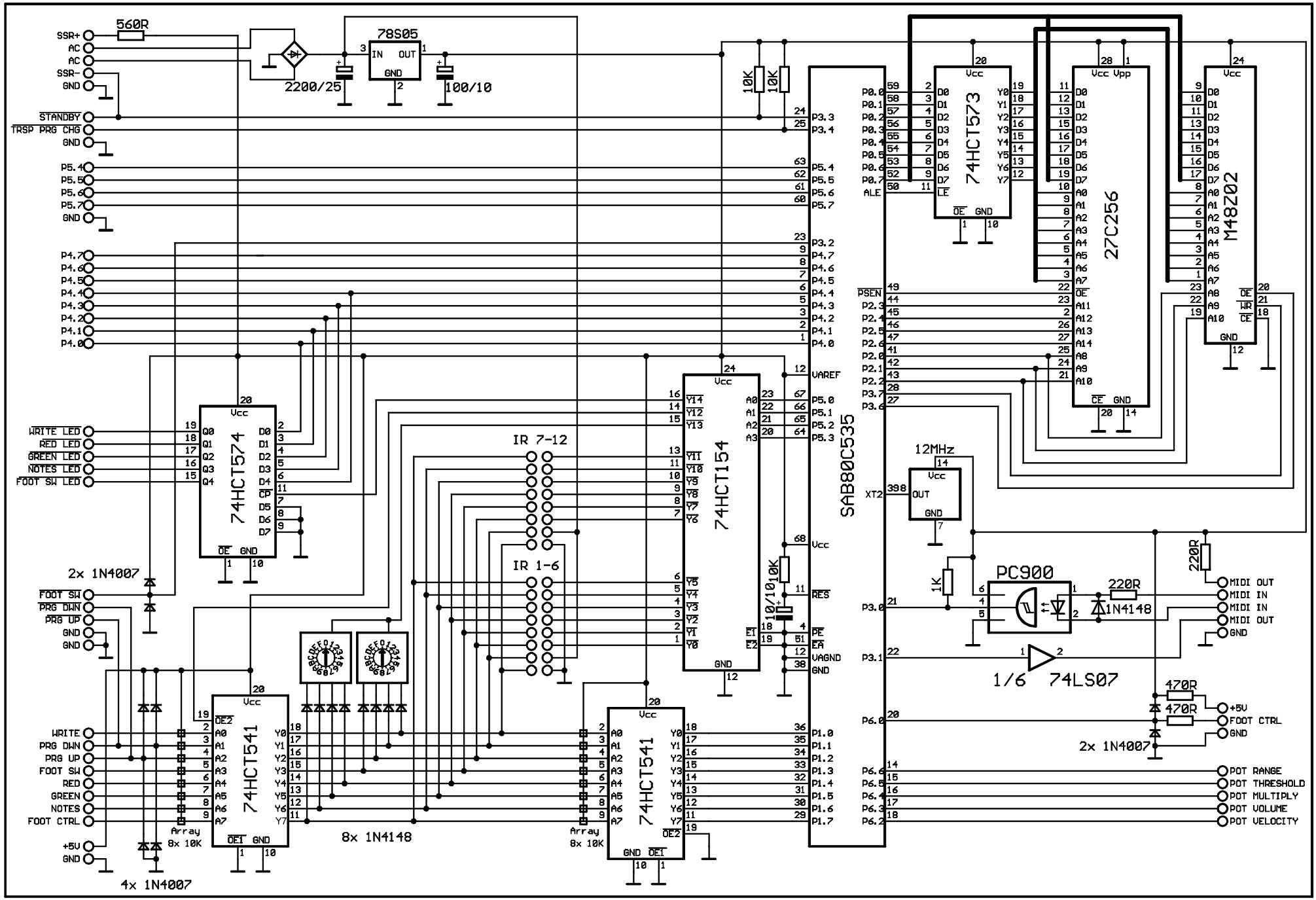
SSR+
AC
AC
SSR-
GND
560R
2200/25
78S05
IN
OUT
GND
100/10
STANDBY
TRSP PRG CHG
GND
P5.4
P5.5
P5.6
P5.7
GND
P4.7
P4.6
P4.5
P4.4
P4.3
P4.2
P4.1
P4.0
10K
10K
SAB80C535
P3.3
P3.4
P5.4
P5.5
P5.6
P5.7
P3.2
P4.7
P4.6
P4.5
P4.4
P4.3
P4.2
P4.1
P4.0
VAREF
P5.0
P5.1
P5.2
P5.3
Vcc
RES
PE
EA
VAGND
GND
P3.0
P3.1
P6.0
P6.6
P6.5
P6.4
P6.3
P6.2
P1.0
P1.1
P1.2
P1.3
P1.4
P1.5
P1.6
P1.7
P0.0
P0.1
P0.2
P0.3
P0.4
P0.5
P0.6
P0.7
ALE
PSEN
P2.3
P2.4
P2.5
P2.6
P2.0
P2.1
P2.2
P3.7
P3.6
74HCT573
LE
OE
GND
27C256
Vcc Vpp
CE
M48Z02
OE
WR
CE
12MHz
XT2
OUT
1K
PC900
220R
1N4148
220R
MIDI OUT
MIDI IN
MIDI IN
MIDI OUT
GND
1/6 74LS07
470R
470R
+5V
FOOT CTRL
GND
2x 1N4007
POT RANGE
POT THRESHOLD
POT MULTIPLY
POT VOLUME
POT VELOCITY
WRITE LED
RED LED
GREEN LED
NOTES LED
FOOT SW LED
74HCT574
Q0
Q1
Q2
Q3
Q4
D0
D1
D2
D3
D4
D5
D6
D7
CP
2x 1N4007
FOOT SW
PRG DWN
PRG UP
GND
GND
IR 7-12
IR 1-6
74HCT154
Y14
Y12
Y13
Y11
Y10
Y9
Y8
Y7
Y6
Y5
Y4
Y3
Y2
Y1
Y0
A0
A1
A2
A3
EI
E2
10/10
10K
WRITE
PRG DWN
PRG UP
FOOT SW
RED
GREEN
NOTES
FOOT CTRL
+5V
GND
74HCT541
OE2
OE1
Array
8x 10K
8x 1N4148
4x 1N4007
74HCT541
Array
8x 10K