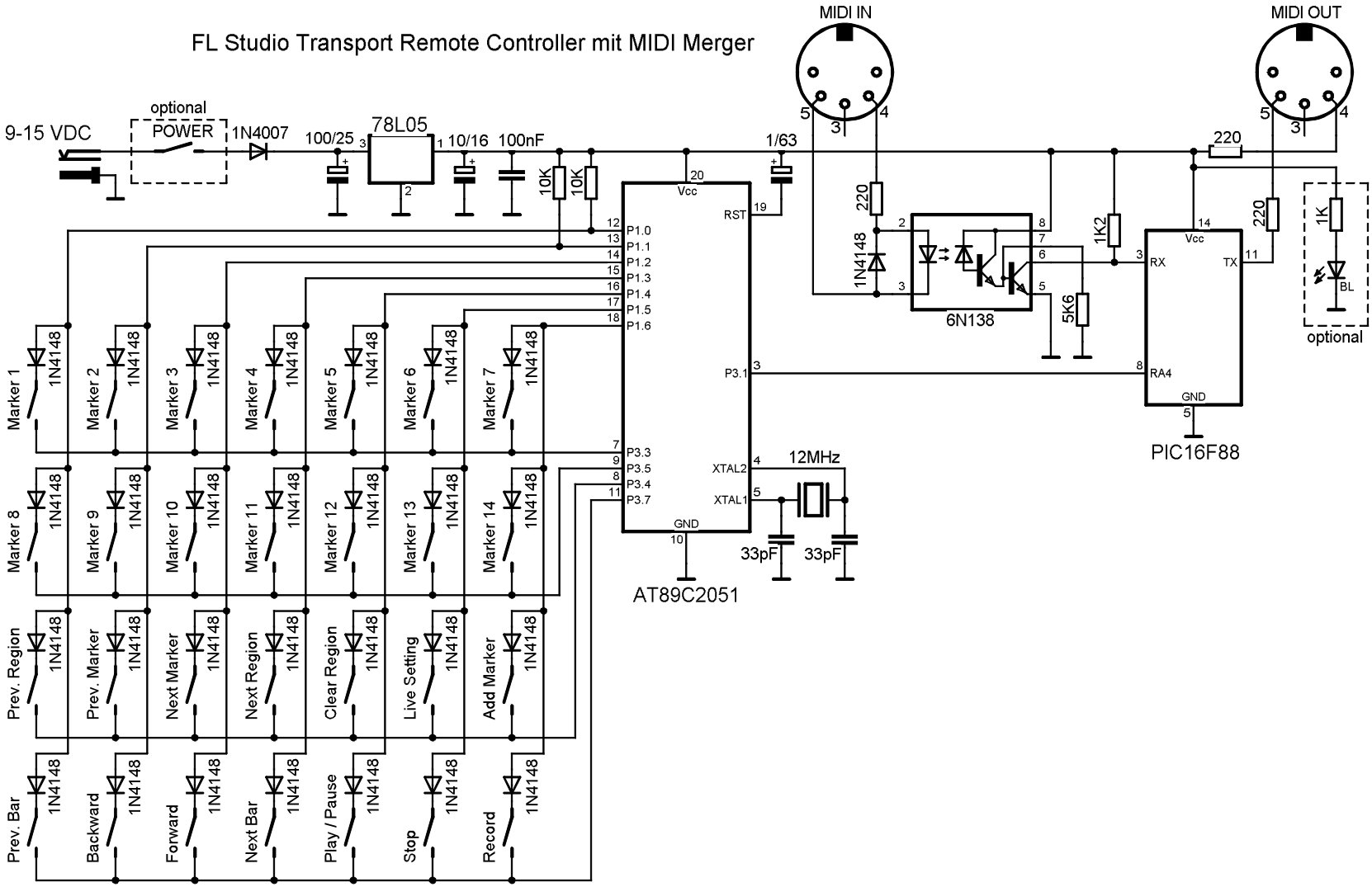
FL Studio Transport Remote Controller mit MIDI Merger
9-15 VDC
optional
POWER
1N4007
100/25
78L05
10/16
100nF
10K
10K
1/63
MIDI IN
MIDI OUT
220
220
1N4148
6N138
1K2
5K6
PIC16F88
RX
TX
RA4
Vcc
GND
1K
BL
optional
AT89C2051
P1.0
P1.1
P1.2
P1.3
P1.4
P1.5
P1.6
P3.1
P3.3
P3.5
P3.4
P3.7
RST
XTAL2
XTAL1
12MHz
33pF
33pF
Marker 1
Marker 2
Marker 3
Marker 4
Marker 5
Marker 6
Marker 7
Marker 8
Marker 9
Marker 10
Marker 11
Marker 12
Marker 13
Marker 14
Prev. Region
Prev. Marker
Next Marker
Next Region
Clear Region
Live Setting
Add Marker
Prev. Bar
Backward
Forward
Next Bar
Play / Pause
Stop
Record